PROFILE OF INNOVATION

Schlüter®-JOLLY

Wall corners and transitions
for decorative edge protection

2.3
Product data sheet

Application and function

Schlüter-JOLLY is a premium finishing profile that offers excellent edge protection for external corners of tiled walls. The right angled profile geometry forms a neat finish for tile coverings.
The profiles are available in different materials, colours and surface finishes to coordinate with tile and grout, fixtures and fittings or to create interesting accents in decorative design.
Other applications include skirtings and transitions for coverings such as carpet, natural stone, or epoxy resin coverings for wall areas.
In addition to the profile's decorative effect, the tiles are protected against damage caused by mechanical stresses along the edges.
Thanks to the joint spacers on both sides, defined grout joints are ensured for the tiles in the aluminium, chrome plated brass and PVC versions (6 mm and above for PVC).
The geometric undercutting provides extra bonding surface for the grout. The stainless steel JOLLY features a joint spacer on the inside of the right-angled arm.
The pre-fabricated corner pieces available (except PVC) and the newly developed plug-in connector allow neat and decorative corner formations to be create
The corners are supplied with innovative plastic connectors that serve as installation aids.
Matching connectors are available to create simple and elegant connections of multiple JOLLY profiles.

Material

Schlüter-JOLLY is available in the following material versions:
MC = chrome-plated brass
AE = anodised aluminium
EB = brushed stainless steel

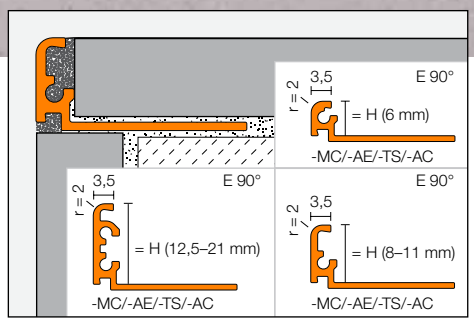

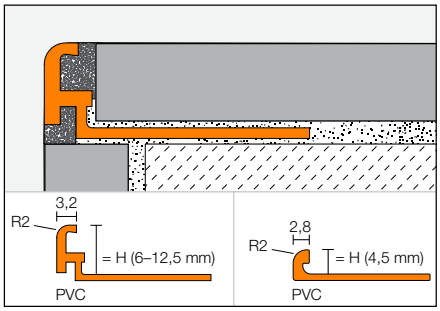

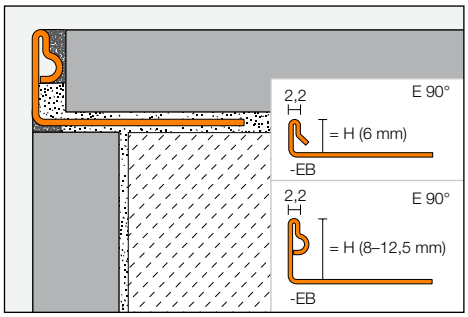

TS = textured finished aluminium
AC = colour coated aluminium
C/A = MyDesign by Schlüter-Systems
P = coloured PVC

Material properties and areas of application:

In special cases, the suitability of a proposed type of profile must be verified, based on anticipated chemical, mechanical and/or other stresses.
Schlüter-JOLLY-MC (chrome plated brass) is a finishing profile that is especially well suited for wall corners and transitions. It is ideal for matching chrome fixtures. Surface areas must be protected against abrasion or scratching. Remove all adhesive and grouting material immediately.

Schlüter-JOLLY-EB is made of roll formed V2A stainless steel (material no. 1.4301). JOLLY-EB is highly durable and especially suited for application areas that must be resistant to chemicals and acids, such as the food industry, breweries, dairies, industrial kitchens, and hospitals.
The anticipated chemical stresses should therefore be verified in advance.

Schlüter-JOLLY-A (anodised aluminium): The aluminium features an anodised finish that retains a uniform appearance during normal use. Surface areas must be protected against abrasion or scratching. Aluminium is sensitive to alkaline media. Cementitious materials, in conjunction with moisture, become alkaline, which may result in corrosion depending on the concentration and length of exposure (aluminium hydroxide formation). For this reason, remove mortar or grouting material immediately from all visible areas and do not cover freshly installed coverings until the adhesive and grout have dried. Solidly embed the profile in the setting material to prevent alkaline water from accumulating in small cavities.

Schlüter-JOLLY-P (coloured PVC) is made of pre-coloured, rigid PVC which resists bending or scratching. The material is UV resistant, although it is not permanently colour stable in exterior applications.

Schlüter-JOLLY AC (colour coated aluminium): The aluminium is suitably pre-treated and then powder-coated with a polyurethane covering. The coating is colour-stable, as well as UV- and weather-resistant. Visible edges should be protected against abrasion.

The surfaces of JOLLY-TS profiles (textured finished aluminium) have a natural appearance (see JOLLY-AC for further properties).

MyDesign
by Schlüter-Systems

Schlüter-JOLLY-AC can be ordered with a coating in 190 colours of the RAL Classic chart as part of the MyDesign by Schlüter-Systems* series or digitally printed with a custom design of your choice (see JOLLY-AC for further properties).

* The product advisors of our sales service and our Technical Department will be pleased to assist you with any questions you may have about MyDesign by Schlüter-Systems.

Schlüter®-JOLLY-AE

Schlüter®-JOLLY-P

Corner connection with mitre cut

Corner connection with pre-fabricated corner piece

Installation

1. Select the profile height of JOLLY according to the tile thickness and the installation method.
2. Apply cementitious tile adhesive to the area where the tile covering will end, using a notched trowel. If the JOLLY profile is to be installed in wall corners, complete the tiling of one wall, then apply tile adhesive in the corner area of the second wall.
3. Firmly press the trapezoid-perforated anchoring leg of the JOLLY profile into the adhesive and align it.
4. Trowel additional adhesive over the perforated anchoring leg to ensure full coverage.
5. Fully embed the adjoining tiles and adjust them in such a way that the upper lip of the profile is flush with the tile.
   Note: The profile may slightly protrude or be recessed in the wall area to offset dimensional variations in the covering material.
6. Set the tile to the lateral joint spacer to ensure a uniform joint.
7. Completely fill the space between the tile and the JOLLY profile with grout.
8. Use suitable materials and tools for the sensitive surfaces to avoid scratches or other damage. Setting materials must be removed immediately, especially on aluminium.
9. External wall corners can also be formed with the JOLLY profile by means of a mitre cut or optionally using the external corner piece available for the metal profiles. If using an external corner piece, the supplied plastic pins serve as an alignment aid between the profile and the corner piece. The application of grout then gives the assembly the necessary strength.

Note:
To securely position the corner piece during installation or grouting, we recommend additional stabilising of the corner, for example with adhesive tape, particularly if only one plastic pin is used.

Notes

Schlüter-JOLLY requires no special maintenance or care. Do not use abrasive cleaning agents on sensitive areas. Damaged anodised surfaces can be restored with paint.
Note: Due to different manufacturing processes, slight colour discrepancies between the profiles and the corners may occur.

Material	Recommended cutting tools	
Stainless steel	With speed control	
Aluminium	Saw blade for nonferrous metals	
Chrome plated brass	Saw blade for nonferrous metals	
Plastic	Saw blade for nonferrous metals	

Follow all safety instructions and specifications provided by the cutting tool manufacturer, including the use of safety goggles, ear protection and gloves. Irrespective of the cutting tool used, ensure that all burr is removed from the profile ends with a file or similar.

Product overview:

Schlüter®-JOLLY-AE

AE = anodised aluminium

Length supplied: 2.5 m, 3 m

H = mm	6	8	10	11	12.5
AE	•	•	•	•	•
External corner	•	•	•	•	•
Connector	•	•	•	•	•

Schlüter®-JOLLY-MC

MC = chrome plated brass Length supplied: 2.5 m

H = mm	6	8	10	11	12.5
MC	•	•	•	•	•
External corner	•	•	•	•	•
Connector	•	•	•	•	•

Schlüter®-JOLLY-EB

EB = brushed stainless steel

Length supplied: 2.5 m, 3 m

H = mm	6	8	10	11	12.5
EB	•	•	•	•	•
External corner*	•	•	•	•	•
Connector	•	•	•	•	•

* the 6 mm external corner includes both a left and right corner piece.

Schlüter®-JOLLY-A

A = anodised aluminium Length supplied: 2.5 m

H = mm	6	8	10	11	12.5
ACG	•	•	•	•	•
ACGB	•	•	•	•	•
AT	•	•	•	•	•
ATG	•	•	•	•	•
ATGB	•	•	•	•	•
AK	•	•	•	•	•
AKG	•	•	•	•	•
AKGB	•	•	•	•	•
AM	•	•	•	•	•
AMG	•	•	•	•	•
AMGB	•	•	•	•	•
ABGB	•	•	•	•	•
ANGB	•	•	•	•	•
AGSG	•	•	•	•	•
AGRB	•	•	•	•	•
External corner	•	•	•	•	•
Connector	•	•	•	•	•

Schlüter®-JOLLY-ACG

ACG = polished chrome anodised aluminium

Length supplied: 2.5 m, 3 m

H = mm	6	8	10	11	12.5
ACG	•	•	•	•	•
External corner	•	•	•	•	•
Connector	•	•	•	•	•

Schlüter®-JOLLY-AC

AC = colour coated aluminium Length supplied: 2.5 m

H = mm	6	8	10	11	12.5
W	•	•	•	•	•
BW	•	•	•	•	•
C/A	•	•	•	•	•
G	•	•	•	•	•
PG	•	•	•	•	•
SB	•	•	•	•	•
GM	•	•	•	•	•
GS	•	•	•	•	•
MBW	•	•	•	•	•
MGS	•	•	•	•	•
External corner	•	•	•	•	•
Connector	•	•	•	•	•

Schlüter®-JOLLY-AC

AC = colour coated aluminium Length supplied: 3 m

H = mm	6	8	10	11	12.5
W	•	•	•	•	•
BW	•	•	•	•	•
C/A	•	•	•	•	•
PG	•	•	•	•	•
GS	•	•	•	•	•
MBW	•	•	•	•	•
MGS	•	•	•	•	•
External corner	•	•	•	•	•
Connector	•	•	•	•	•

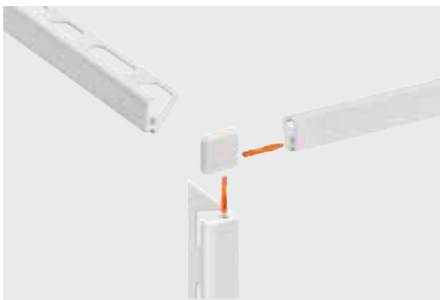

Corner piece with Schlüter®-JOLLY

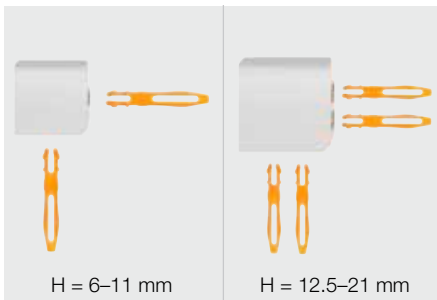

Connector for Schlüter®-JOLLY

Schlüter®-JOLLY-TS

TS = aluminium, textured finished

Length supplied: 2.5 m, 3 m

H = mm	6	8	10	11	12.5
TSI	•	•	•	•	•
TSC	•	•	•	•	•
TSBG	•	•	•	•	•
TSB	•	•	•	•	•
TSSG	•	•	•	•	•
TSG	•	•	•	•	•
TSOB	•	•	•	•	•
TSLA	•	•	•	•	•
TSDA	•	•	•	•	•
TSR	•	•	•	•	•
External corner	•	•	•	•	•
Connector	•	•	•	•	•

Schlüter®-JOLLY-TS

TS = aluminium, textured finished

Length supplied: 2.5 m

H = mm	6	8	10	11	12.5	14	16	21
TSI	•	•	•	•	•	•	•	•
TSB	•	•	•	•	•	•	•	•
TSSG	•	•	•	•	•	•	•	•
External corner	•	•	•	•	•	•	•	•
Connector	•	•	•	•	•	•	•	•

Schlüter®-JOLLY-P

P = coloured PVC

Length supplied: 2.5 m

H = mm	4.5	6	8	10	11	12.5
W	•	•	•	•	•	•
BW	•	•	•	•	•	•
BH		•	•	•	•	
SP		•	•	•	•	
PG		•	•	•	•	•
HG	•	•	•	•	•	•
GS		•	•	•	•	

Schlüter®-JOLLY-P

P = coloured PVC

Length supplied: 3 m

H = mm	6	8	10	11	12.5
W	•	•	•	•	•
BW	•	•	•	•	•
PG	•	•	•	•	•

Colours:
W = white
BW = brilliant white
C/A = MyDesign by Schlüter-Systems*
G = grey
PG = pastel grey
SB = black brown
GM = grey metallic
GS = graphite black
MBW = matte brilliant white
MGS = matte graphite black
ACG = polished chrome anodised aluminium
ACGB = brushed chrome anodised aluminium

AT = satin titanium anodised aluminium
ATG = polished titanium anodised aluminium
ATGB = brushed titanium anodised aluminium
(Colour may differ from other Schlüter profiles in ATGB finish)
AK = satin copper/bronze anodised aluminium
AKG = polished copper/bronze anodised aluminium
AKGB = brushed copper/bronze anodised aluminium
AM = satin brass anodised aluminium
AMG = polished brass anodised aluminium
AMGB = brushed brass anodised aluminium
ABGB = brushed antique bronze anodised aluminium
AGSG = polished chrome black anodised aluminium

AGRB = brushed chrome graphite anodised aluminium
TSI = textured natural ivory
TSC = textured natural cream
TSBG = textured natural beige grey
TSB = textured natural beige
TSSG = textured natural stone grey
TSG = textured natural grey
TSOB = natural bronze
TSLA = textured natural light anthracite
TSDA = textured natural dark anthracite
TSR = textured natural rustic brown

* custom RAL coating or digital printing

Text template for tenders:

_____linear metres of Schlüter-JOLLY as a finishing and corner profile for wall coverings with a trapezoid perforated anchoring leg and a right angled section with a widened top flange, to be professionally installed while observing the manufacturer's instructions.
The installation of external corners for metal JOLLY profiles
- is to be included in the unit prices.
- invoiced separately.

Material:
- -MC = chrome plated brass
- -AE = anodised aluminium
- -EB = brushed stainless steel
- -TS = textured finished aluminium
- -AC = colour coated aluminium
- C/A = MyDesign by Schlüter-Systems
- -P = coloured PVC

Profile height: _____ mm
Colour/anodising: _____
Art.-No.: _____
Material _____..../m
Labour: _____..../m
Total: _____...../m

Schlüter-Systems KG · Schmölestraße 7 · D-58640 Iserlohn · Tel.: +49 2371 971-1261 · Fax: +49 2371 971-1112 · schlueter-systems.com
Schlüter-Systems Ltd · Units 3-6 Bardon 22 Industrial Estate · Bardon Hill · Coalville · Leicestershire · LE67 1TE
Tel.: +44 1530 813396 · Fax: +44 1530 813376 · sales@schluter.co.uk · schluter.co.uk

Art.-No. 550 484 – edition 07/24 – Reprints will invalidate this issue – See website for the latest version.